Powerful. Beautiful.

Excellence · Innovation

IPC21121D
IPC22121D
IPC24121D

Shanghai Panelmate Electronics Co., Ltd.

12.1" XGA Industrial Panel PC（D Series）

PANELMATE
Creative HMI Solution

IPC21121D & IPC22121D & IPC24121D

PANELMATE
Creative HMI Solution

Features

- Display type：12.1",12.2",15",15.6",17",18.5",19",21.5",24",27"
- Front panel/back cover：Aluminium-magnesium alloy
- Modular design, with PC6970 series desktop host, support expansion
- Expansion 1 x PCIe x 16 + 1 x PCIe x 8 or 1 x PCIe x 16 + 1 x PCI
- Front panel/Rear：IP65 / IP20
- Screen Type: Single point resistive touchscreen,Multi-point capacitive touchscreen,Tempered glass screen
- OS:Win7，Win8，Win10，Win11，Linux,etc
- Processor:Intel®Core™6th/7th/8th/9th i3 i5 i7、Intel®Pentium® processor optional
- DC 12~24V
- Active cooling with fan

Namely Rule

IPC2XXXXDHP-LK4-xxxxK-4G-128-xxxx

- Industrial PC
- Series code
  - 21：Resistance screen
  - 22：Capacitive screen
  - 24：Tempered glass screen
- Screen size
- Desktop CPU
- （Support 15.6” 18.5” ）High resolution screen
- （Support 21.5” 24” 27” ）Portrait screen
- Extension module
  - LK4：Integrated IDD-LINK4-T (transmitter)
  - 4RJ：Integrated 4 X LAN
  - POE：Integrated POE card
  - PCIe：Integrated PCIe card
  - PCI：Integrated PCI card
- Customized code（default：blank）
- SSD capacity
- Memory capacity
- Number of extension button（default: 00K）
- CPU model
  - 44：Intel®Pentium G4400
  - 61/65/67：Intel®Core™ 6th i3 i5 i7
  - 71/75/77：Intel®Core™ 7th i3 i5 i7
  - 81/85/87：Intel®Core™ 8th i3 i5 i7
  - 91/95/97：Intel®Core™ 9th i3 i5 i7

Specifications

Model		IPC21121D & IPC22121D & IPC24121D
Processor	CPU	Intel®Pentium G4400，Intel®Core™ 6th/7th/8th/9th i3/ i5/ i7
	BIOS	AMI UEFI 64Mbit
	chipset	H110
	Memory	DDR4-2133，Max：32GB
	Storage	1x2.5" SATA 3.0 +1 x mSATA
I/O	Network (LAN)	2xIntel i210 1000Mbps RJ45 ethernet port with surge protection
	Audio	Realtek® HDA Codec, with MIC/Line-out and Amplifier
	USB	4xUSB3.0
	COM	2xRS232/RS485 with surge protection，RS485 support automatic flow control
	Expansion Slot	1xMini-PCIe X1,Support 4G LTE/WIFI/BT with Sim card slot
	Rear I/O	1xDVI/2xGLAN/4xUSB3.0/2xCOM/DP/DC IN/Power Switch
Power	Input Voltage	DC 12~24V
	Power	125W
Physical	Display Port	DP/DVI
	Dimension (WxHxD)	306mmx259mmx63.5mm（12.05"x10.20"x2.50"）
	Open Size (WxH)	295mmx248mm（11.61"x9.76"）
	Net Weight(kg	4.3kg
	Mounting	Embedded
LCD	Display Type	12.1" XGA TFT
	Resolution	1024x768
	Colors	16.7M
	Active Area (WxH)	245.76mmx184.32mm（9.68"x7.26"）
	Backlight	LED
	MTBF（hour）	50000hrs
	Pixel Pitch（HxV）	0.24x0.24
	Luminance(cd/m2)	350cd/m2
	Contrast Ratio	800:1
	Viewing Angle	（L）80/（R）80/（U）80/（D）80
Touchscreen	Touch Type	Single point resistive touchscreen & Multi-point capacitive touchscreen & Tempered glass screen
	Light Transmission	>85%
	Controller	USB interface
	Driver Support	Windows7，Windows8，Windows 10，Windows 11，Linux
	Multi-touch	10 points
	Surface Hardness	Resistive touch screen: Mohs hardness >= 3H；Capacitive touchscreen：Mohs' Number 7H
Environment	Operating Temperature	-20~70℃
	Storage Temperature	-30~80℃
	Relative Humidity	5~95%（Non condensation）
	Shock	Operating 10G peak acceleration(11 ms duration), follow IEC 60068-2-27
	Vibration	Operating Random Vibration Test 5~500Hz, 1Grms@with HDD;2Grms@with SSD, follow IEC 60068-2-64
	EMC	CE/FCC Class A
	Front Panel Protection	IP65

All product specifications are subject to change without notice

Last updated：Apr. 2024

IPC21121D & IPC22121D & IPC24121D

Technical Drawings unit: mm

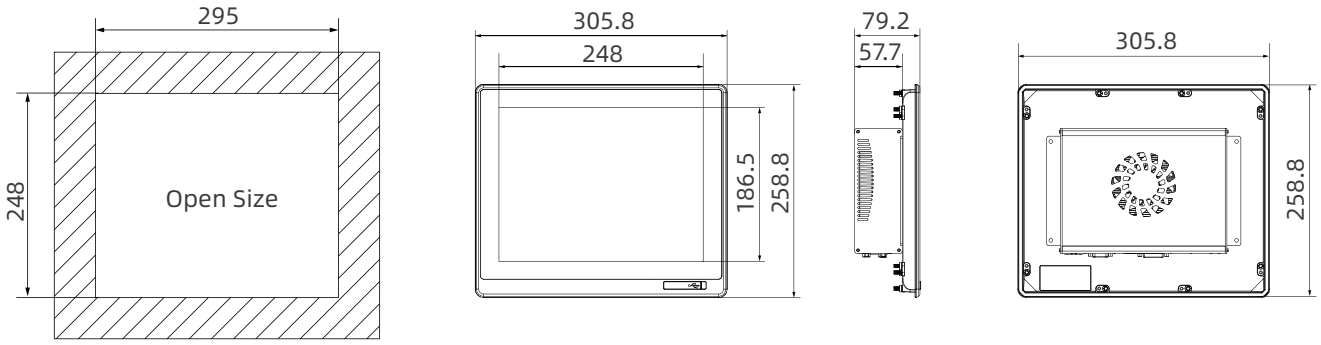

Panel Cutout Dimensions: 295mm x 248mm (11.61 x 9.76 in)

External I/O View

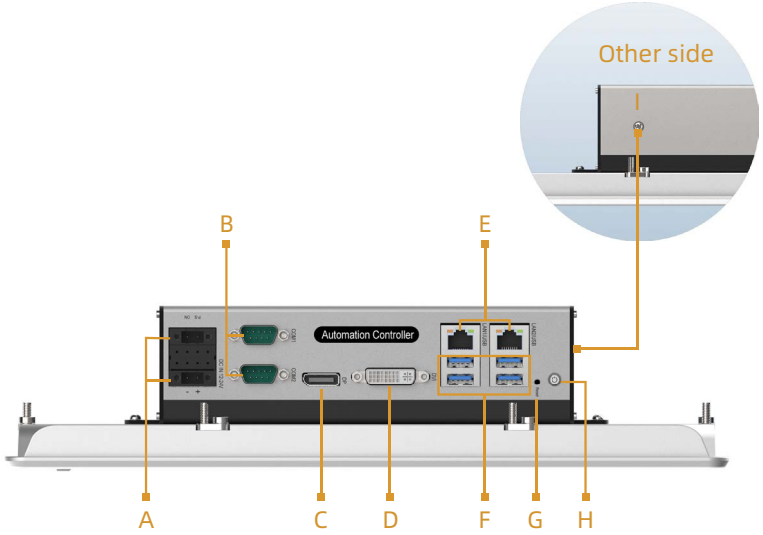

Interface definition:

A: DC 12~24V
B: 2 x RS232/485
C: DP
D: DVI
E: 2 x RJ45
F: 4 X USB3.0
G: Reset
H: Power Switch
I : GND

miniPCIe Expansion slot

Built-in USB2.0 dongle

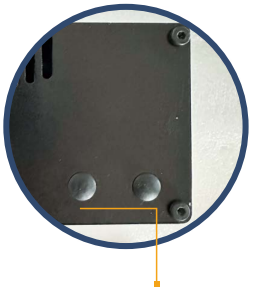

2 x Wireless circle antenna

Remark: All above shows the standard interface, and the other expansion modules are detailed in the PC6970 series datasheet

Ordering Information

Part Number	Description
IPC21121D-4400K-4G-128G	12.1" TFT LCD / Resistive touch screen / No extension button / DC 12~24V Input / Resolution 1024x768 / Intel®Pentium G4400 /4G RAM /128G mSATA/2xLAN /4xUSB /1xDP/1xDVI
IPC22121D-4400K-4G-128G	12.1" TFT LCD / Capacitive touch screen / No extension button / DC 12~24V Input / Resolution 1024x768/ Intel®Pentium G4400 /4G RAM /128G mSATA/2xLAN /4xUSB /1xDP/1xDVI
IPC24121D-4400K-4G-128G	12.1" TFT LCD / Tempered glass screen / No extension button / DC12~24V Input / Resolution 1024x768 / Intel®Pentium G4400 /4G RAM /128G mSATA/2xLAN /4xUSB /1xDP/1xDVI

Optional Accessories

CPU	Intel®Pentium	G4400
	Intel®Core™ 6th	i3-6100，i5-6500，i7-6700
	Intel®Core™ 7th	i3-7100，i5-7500，i7-7700
	Intel®Core™ 8th	i3-8100，i5-8500，i7-8700
	Intel®Core™ 9th	i3-9100，i5-9500，i7-9700
DDR4	DDR4-2400MHz，4GB，8GB，16GB，32GB	
SSD	mSATA，64GB，128GB，256GB，512GB，1TB	
WIFI set	miniPCIe，WIFI sets，（7260HMWBN）Cylindrical antenna	
4G set/EC203G module	miniPCIe	

Packing List

Terminal	2x3pin phoenix terminal

Note: Package contents are subject to change without prior notice